Hoppe's Brain
BFA-555 Soft Start
LEFT

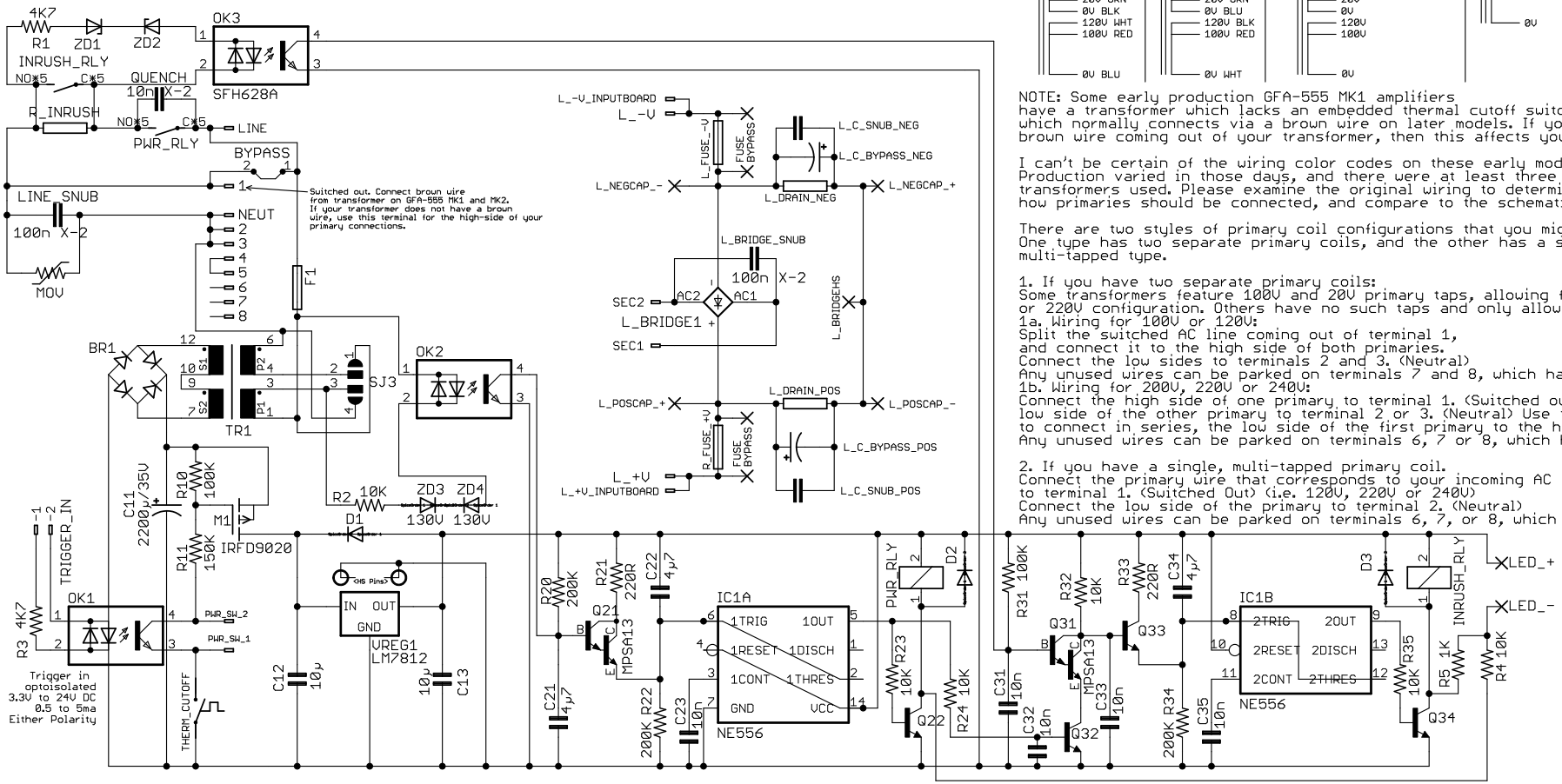

GFA-555 MK1 Primaries (Most common type with brown wire and thermal cutoff)

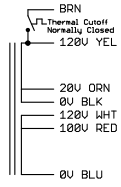

GFA-555 MK2 Primaries (No known variations)

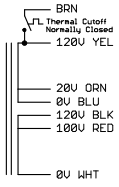

Some early production MK1 models, may be marked "Pierdant" brand. Two primary coils with 100V and 20V taps. Color codes uncertain. Refer to original wiring. Your transformer may vary.

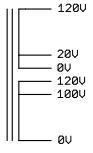

Some early production MK1 models. Single, Multi-tap primary. Transformer may be potted in a can. Color codes uncertain. Refer to original wiring. Your transformer may vary.

NOTE: Some early production GFA-555 MK1 amplifiers have a transformer which lacks an embedded thermal cutoff switch, which normally connects via a brown wire on later models. If you do not have a brown wire coming out of your transformer, then this affects you.

I can't be certain of the wiring color codes on these early models. Production varied in those days, and there were at least three different transformers used. Please examine the original wiring to determine how primaries should be connected, and compare to the schematic.

There are two styles of primary coil configurations that you might have. One type has two separate primary coils, and the other has a single, multi-tapped type.

1. If you have two separate primary coils:
Some transformers feature 100V and 20V primary taps, allowing for 100V, 200V, or 220V configuration. Others have no such taps and only allow for 120V or 240V.
1a. Wiring for 100V or 120V:
Split the switched AC line coming out of terminal 1, and connect it to the high side of both primaries.
Connect the low sides to terminals 2 and 3. (Neutral)
Any unused wires can be parked on terminals 7 and 8, which have no connection.
1b. Wiring for 200V, 220V or 240V:
Connect the high side of one primary to terminal 1. (Switched out) and connect the low side of the other primary to terminal 2 or 3. (Neutral) Use terminals 4 and 5 to connect in series, the low side of the first primary to the high side of the second.
Any unused wires can be parked on terminals 6, 7 or 8, which have no connection.

2. If you have a single, multi-tapped primary coil.
Connect the primary wire that corresponds to your incoming AC voltage to terminal 1. (Switched Out) (i.e. 120V, 220V or 240V)
Connect the low side of the primary to terminal 2. (Neutral)
Any unused wires can be parked on terminals 6, 7, or 8, which have no connection.